ICB, M18 short or long body versions

Proximity inductive sensors, extended range, nickel-plated brass housing

Benefits

- Sensing distance: 8 to 14 mm
- Flush or non-flush types
- Short or long body versions
- Rated operational voltage (U_b): 10 - 36 VDC
- Output: DC 200 mA, NPN or PNP
- Normally open or Normally closed
- LED indication for output ON
- Protection: reverse polarity, short circuit, transients
- Cable or M12 plug versions
- According to IEC 60947-5-2
- Laser engraved on front cap, permanently legible
- CSA certified for Hazardous Locations

Description

A family of inductive proximity switches in industrial standard nickel-plated brass housings. They are able to handle applications where high sensing range is requested.
Output is open collector NPN or PNP transistors.

References

Order code

ICB18 □ □ □ □ □ □ □

Enter the code entering the corresponding option instead of □

Code	Option	Description
ICB	-	Proximity inductive sensors, nickel-plated brass housing
18	-	Housing size
□	S	Housing length: short
	L	Housing length: long
□	30	Thread length: 30mm
	50	Thread length: 50mm
□	F	Detection principle: flush mounting
	N	Detection principle: non-flush mounting
□	08	Sensing distance: 8mm
	14	Sensing distance: 14mm
□	N	Output type: NPN
	P	Output type: PNP
□	O	Output configuration: normally open
	C	Output configuration: normally closed
□		Connection: cable
	M1	Connection: plug

Selection guide

Con-nec-tion	Body style	Rated operating distance Sn	Ordering no. NPN, Normally open	Ordering no. PNP, Normally open	Ordering no. NPN, Normally closed	Ordering no. PNP, Normally closed
Cable	Short	8 mm [1]	**ICB18S30F08NO**	**ICB18S30F08PO**	**ICB18S30F08NC**	**ICB18S30F08PC**
Cable	Short	14 mm [2]	**ICB18S30N14NO**	**ICB18S30N14PO**	**ICB18S30N14NC**	**ICB18S30N14PC**
Plug	Short	8 mm [1]	**ICB18S30F08NOM1**	**ICB18S30F08POM1**	**ICB18S30F08NCM1**	**ICB18S30F08PCM1**
Plug	Short	14 mm [2]	**ICB18S30N14NOM1**	**ICB18S30N14POM1**	**ICB18S30N14NCM1**	**ICB18S30N14PCM1**
Cable	Long	8 mm [1]	**ICB18L50F08NO**	**ICB18L50F08PO**	**ICB18L50F08NC**	**ICB18L50F08PC**
Cable	Long	14 mm [2]	**ICB18L50N14NO**	**ICB18L50N14PO**	**ICB18L50N14NC**	**ICB18L50N14PC**
Plug	Long	8 mm [1]	**ICB18L50F08NOM1**	**ICB18L50F08POM1**	**ICB18L50F08NCM1**	**ICB18L50F08PCM1**
Plug	Long	14 mm [2]	**ICB18L50N14NOM1**	**ICB18L50N14POM1**	**ICB18L50N14NCM1**	**ICB18L50N14PCM1**

[1] For flush mounting in metal
[2] For non-flush mounting in metal

Sensing

Detection

Assured operating sensing distance (S_a)	$0 \le S_a \le 0.81 \times S_n$
Effective operating distance (S_r)	$0.9 \times S_n \le S_r \le 1.1 \times S_n$
Usable operating distance (S_u)	$0.9 \times S_r \le S_u \le 1.1 \times S_r$
Differential travel (H) (Hysteresis)	1 to 20% of sensing dist.

Correction factors

The specific operating distance S_n refers to defined measuring conditions. The following data have to be considered as general guidelines.

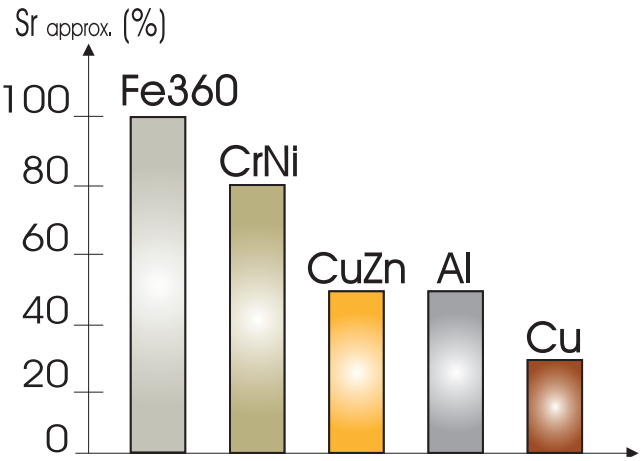

Fe360: steel
CrNi: chrome-nickel
CuZn: brass
Al: aluminium
Cu: copper
Sr: effective operating distance

Fig. 1 *The rated operating distance is reduced by the use of metals and alloys other than Fe360. The most important reduction factors for inductive proximity sensors are shown in the figure.*

Accuracy

Repeat accuracy (R)	≤ 10%

Features

Power Supply

Rated operational voltage (U_b)	10 to 36 VDC (ripple incl.)
Ripple (U_{rpp})	≤ 10%
No load supply current (I_o)	≤ 15 mA
Power ON delay (t_v)	≤ 20 ms

Outputs

Output current (I_e)	≤ 200 mA @ 50°C (≤ 150 mA @ 50-70°C)
OFF-state current (I_r)	≤ 50 µA
Voltage drop (U_d)	Max. 2.5 VDC @ 200 mA
Protection	Reverse polarity, short-circuit, transients
Voltage transient	1 kV/0.5 J

Response times

Max. operating frequency (f)	≤ 1500 Hz

Indication

Indication for output ON **NO version** **NC version**	Activated LED, yellow Target present Target not present
Indication for short circuit/ overload	LED blinking (f = 2 Hz)

Environmental

Ambient temperature **Operating** **Storage**	 -25° to +70°C (-13° to +158°F) -30° to +80°C (-22° to +176°F)
Shock and vibration	IEC 60947-5-2/7.4
Degree of protection	IP67

Compatibility and conformity

EMC protection - According to IEC 60947-5-2	
Electrostatic discharge (ESD)	IEC 61000-4-2 8 kV air discharge, 4 kV contact discharge
Radiated radio frequency	IEC 61000-4-3 3 V/m
Burst immunity	IEC 61000-4-4 2 kV
Conducted radio frequency	IEC 61000-4-6 3 V
Power frequency magnetic fields	IEC 61000-4-8 30 A/m

$MTTF_d$	850 years @ 50°C (122°F)

Approvals	CE c UL us LISTED C SP US
	CCC is not required for products rated ≤ 36 V

Mechanical data

Weight (cable/nuts included) **Cable** **Plug**	 Max. 150 g Max. 70 g
Mounting	Flush or non-flush mountable
Material	Body: nickel-plated brass Front: grey thermoplastic polyester
Tightening torque	Non-flush version: 25 Nm Flush version: From 0 mm to 7 mm: 20 Nm > 7 mm: 25 Nm

Electrical connection

Cable	Ø 4.1 x 2 m, 3 x 0.25 mm^2, grey PVC, oil proof
Plug	M12 x 1

Connection Diagrams

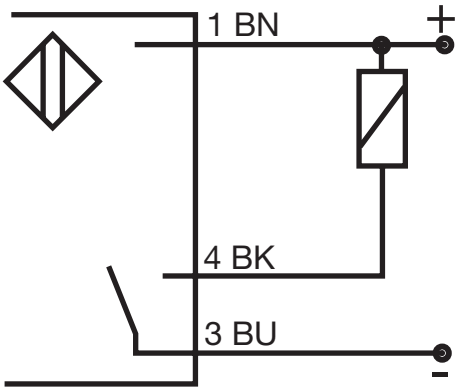

Fig. 2 *NPN - Normally open*

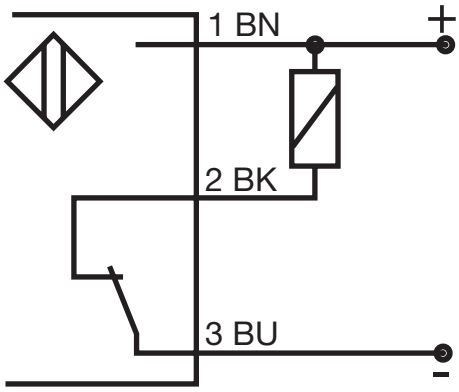

Fig. 3 *NPN - Normally closed*

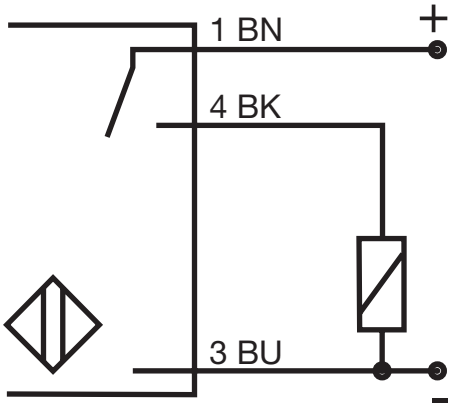

Fig. 4 *PNP - Normally open*

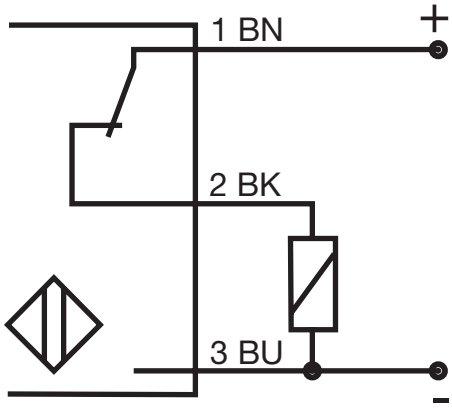

Fig. 5 *PNP - Normally closed*

Colour code		
BN: brown	**BK:** black	**BU:** blue

Dimensions [mm]

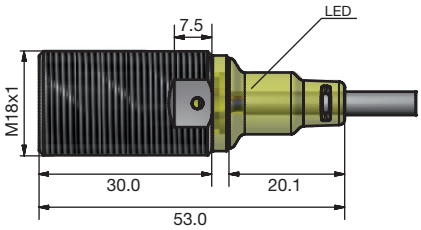

Fig. 6 *Short body, flush version, cable*

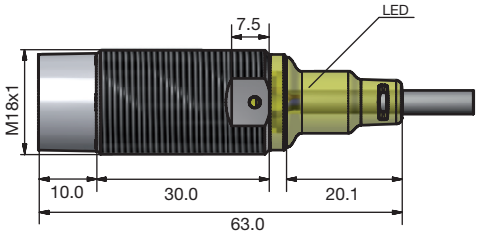

Fig. 7 *Short body, non-flush version, cable*

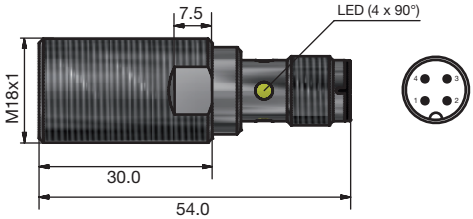

Fig. 8 *Short body, flush version, plug*

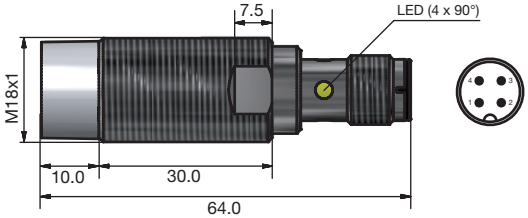

Fig. 9 *Short body, non-flush version, plug*

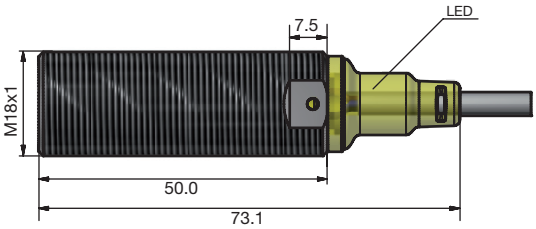

Fig. 10 *Long body, flush version, cable*

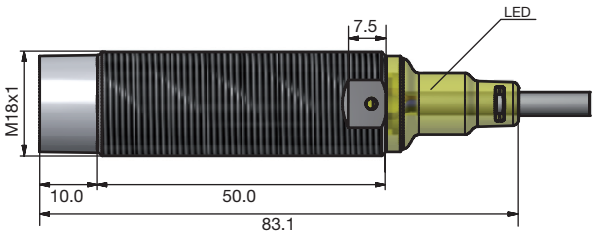

Fig. 11 *Long body, non-flush version, cable*

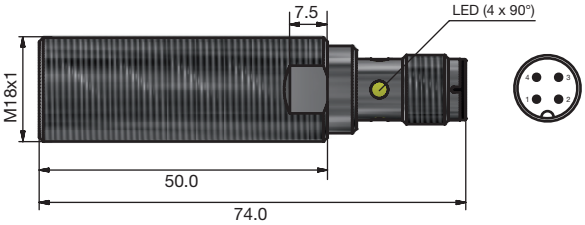

Fig. 12 *Long body, flush version, plug*

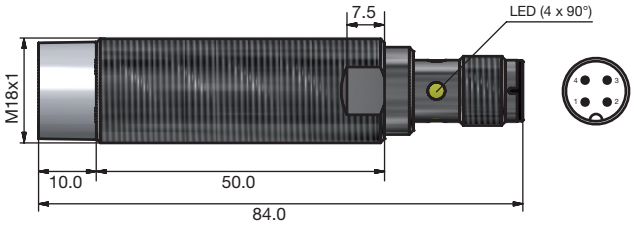

Fig. 13 *Long body, non-flush version, plug*

Installation

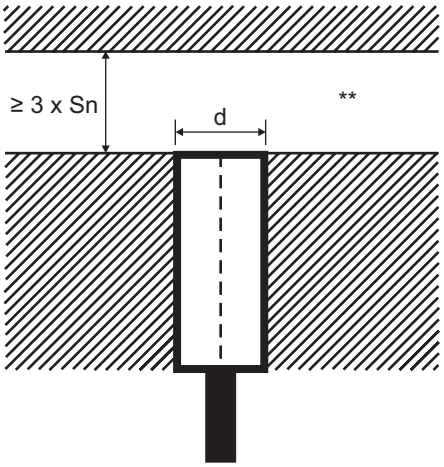

Fig. 14 *Flush sensor, when installed in damping material*

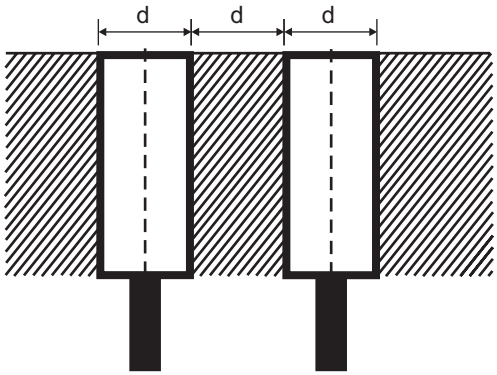

Fig. 15 *Flush sensors, when installed together in damping material*

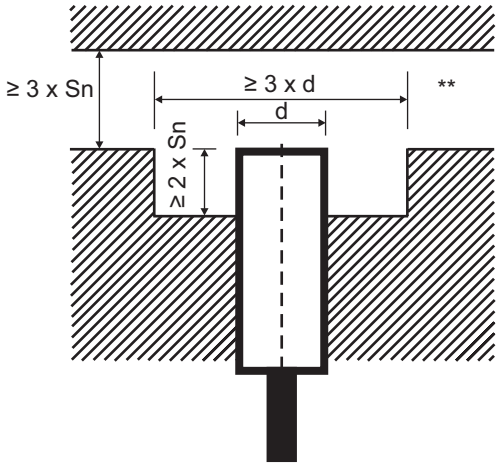

Fig. 16 *Non-flush sensor, when installed in damping material*

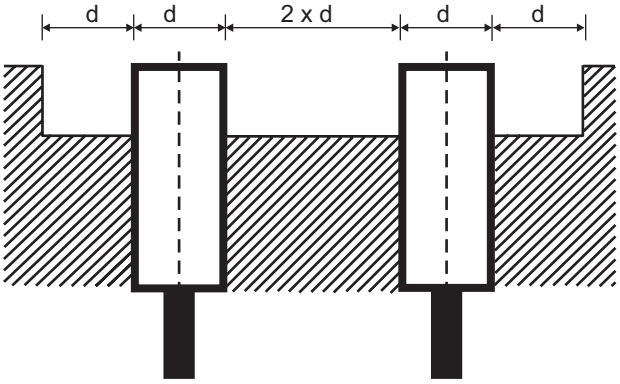

Fig. 17 *Non-flush sensors, when installed together in damping material*

** Free zone or non-damping material

S_n: nominal sensing distance
d: sensor diameter: 18 mm

Sensors installed opposite each other

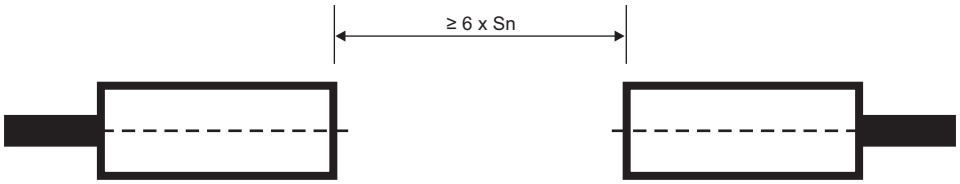

Fig. 18 *For sensors installed opposite each other, a minimum space of 6 x Sn (the nominal sensing distance) must be observed*

Delivery contents and compatible components

Delivery contents

- Inductive proximity switch
- 2 nuts
- Packaging: plastic bag

CARLO GAVAZZI compatible components

Accessories for plug versions

	PVC	PUR
3-wire angled connector, 2 m cable	CONB13NF-A2	CONB13NF-A2P
3-wire angled connector, 5 m cable	CONB13NF-A5	CONB13NF-A5P
3-wire angled connector, 10 m cable	CONB13NF-A10	CONB13NF-A10P
3-wire angled connector, 15 m cable	CONB13NF-A15	CONB13NF-A15P
3-wire straight connector, 2 m cable	CONB13NF-S2	CONB13NF-S2P
3-wire straight connector, 5 m cable	CONB13NF-S5	CONB13NF-S5P
3-wire straight connector, 10 m cable	CONB13NF-S10	CONB13NF-S10P
3-wire straight connector, 15 m cable	CONB13NF-S15	CONB13NF-S15P

For any additional information or different options, please refer to the “General Accessories - Connector Cables -Type CONB1...” datasheets.

COPYRIGHT ©2019
Content subject to change. Download the PDF: www.productselection.net